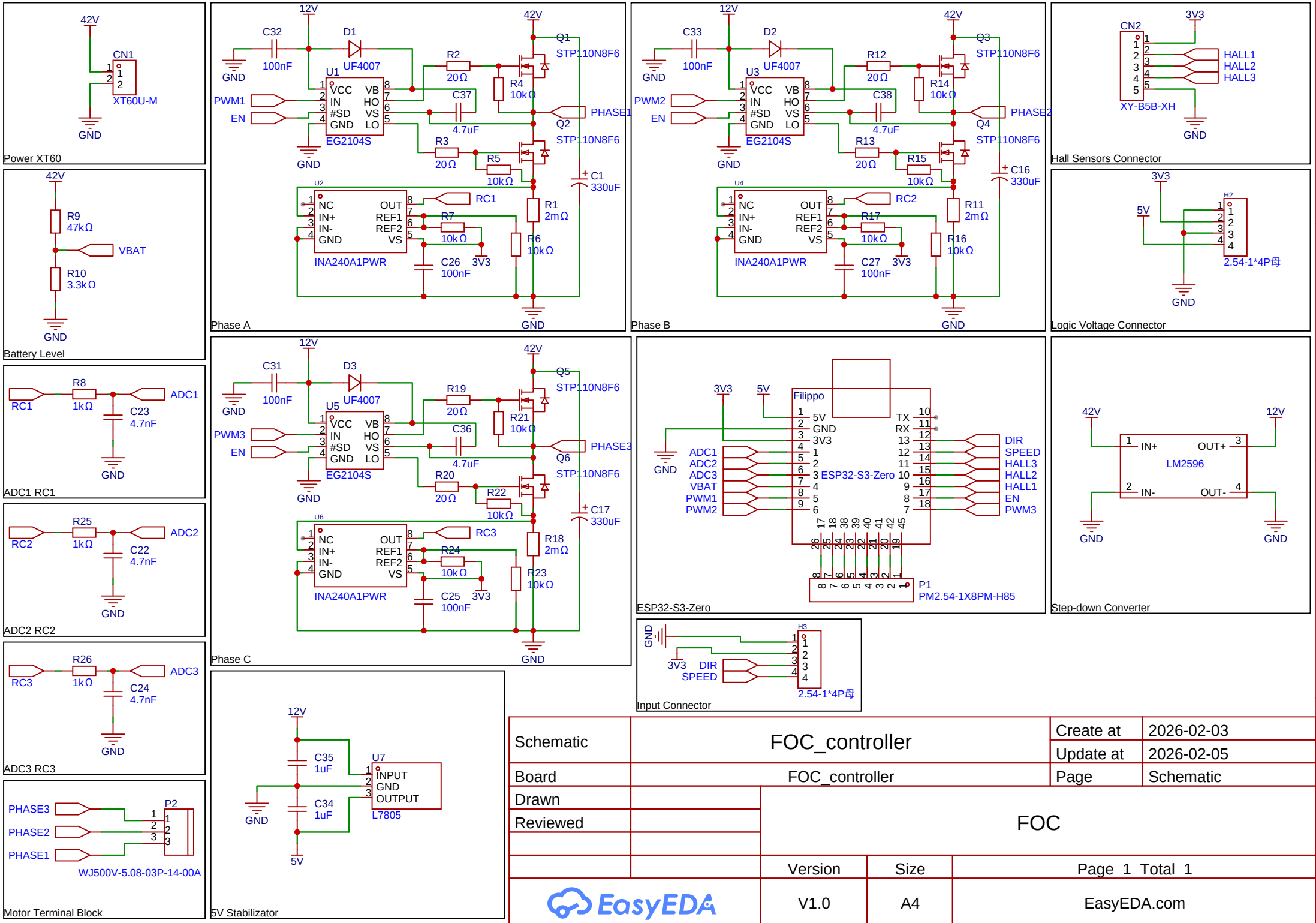
Power XT60
CN1
XT60U-M
42V
GND
Battery Level
R9 47kΩ
R10 3.3kΩ
VBAT
ADC1 RC1
R8 1kΩ
C23 4.7nF
ADC2 RC2
R25 1kΩ
C22 4.7nF
ADC3 RC3
R26 1kΩ
C24 4.7nF
Motor Terminal Block
PHASE3
PHASE2
PHASE1
P2
WJ500V-5.08-03P-14-00A
Phase A
12V
C32 100nF
D1 UF4007
U1 EG2104S
VCC IN #SD GND VB HO VS LO
PWM1
EN
R2 20Ω
C37 4.7uF
R3 20Ω
R4 10kΩ
R5 10kΩ
Q1 STP110N8F6
Q2 STP110N8F6
PHASE1
C1 330uF
U2 INA240A1PWR
NC IN+ IN- GND OUT REF1 REF2 VS
RC1
R7 10kΩ
C26 100nF
3V3
R1 2mΩ
R6 10kΩ
Phase B
C33 100nF
D2 UF4007
U3 EG2104S
PWM2
R12 20Ω
C38 4.7uF
R13 20Ω
R14 10kΩ
R15 10kΩ
Q3 STP110N8F6
Q4 STP110N8F6
PHASE2
C16 330uF
U4 INA240A1PWR
RC2
R17 10kΩ
C27 100nF
R11 2mΩ
R16 10kΩ
Phase C
C31 100nF
D3 UF4007
U5 EG2104S
PWM3
R19 20Ω
C36 4.7uF
R20 20Ω
R21 10kΩ
R22 10kΩ
Q5 STP110N8F6
Q6 STP110N8F6
PHASE3
C17 330uF
U6 INA240A1PWR
RC3
R24 10kΩ
C25 100nF
R18 2mΩ
R23 10kΩ
5V Stabilizator
C35 1uF
C34 1uF
U7 L7805
INPUT GND OUTPUT
5V
CN2
XY-B5B-XH
HALL1
HALL2
HALL3
Hall Sensors Connector
Logic Voltage Connector
H2
2.54-1*4P母
ESP32-S3-Zero
Filippo
ESP32-S3-Zero
P1
PM2.54-1X8PM-H85
Step-down Converter
LM2596
IN+ OUT+ IN- OUT-
Input Connector
H3
2.54-1*4P母
Schematic
FOC_controller
Create at 2026-02-03
Update at 2026-02-05
Board
FOC_controller
Page
Schematic
Drawn
Reviewed
FOC
Version
Size
Page 1 Total 1
V1.0
A4
EasyEDA.com